LONG SEAMS		
COURSE	ORIENTATION	ORIENTATION
1(LEFT)	90°	270°
2	96°	276°
3	90°	270°
4	96°	276°
5	90°	270°
6	96°	276°
7	90°	270°
8	96°	276°

*HOR – LEFT TO RIGHT

Ship loose items:
NONE

*NOTE:
ALL ELEVATIONS ARE PULLED FROM WELD SEAM FOR EASE OF FABRICATION.

*NOTE:
CUSTOMER IS RESPONSIBLE FOR SUPPORT STRUCTURE.

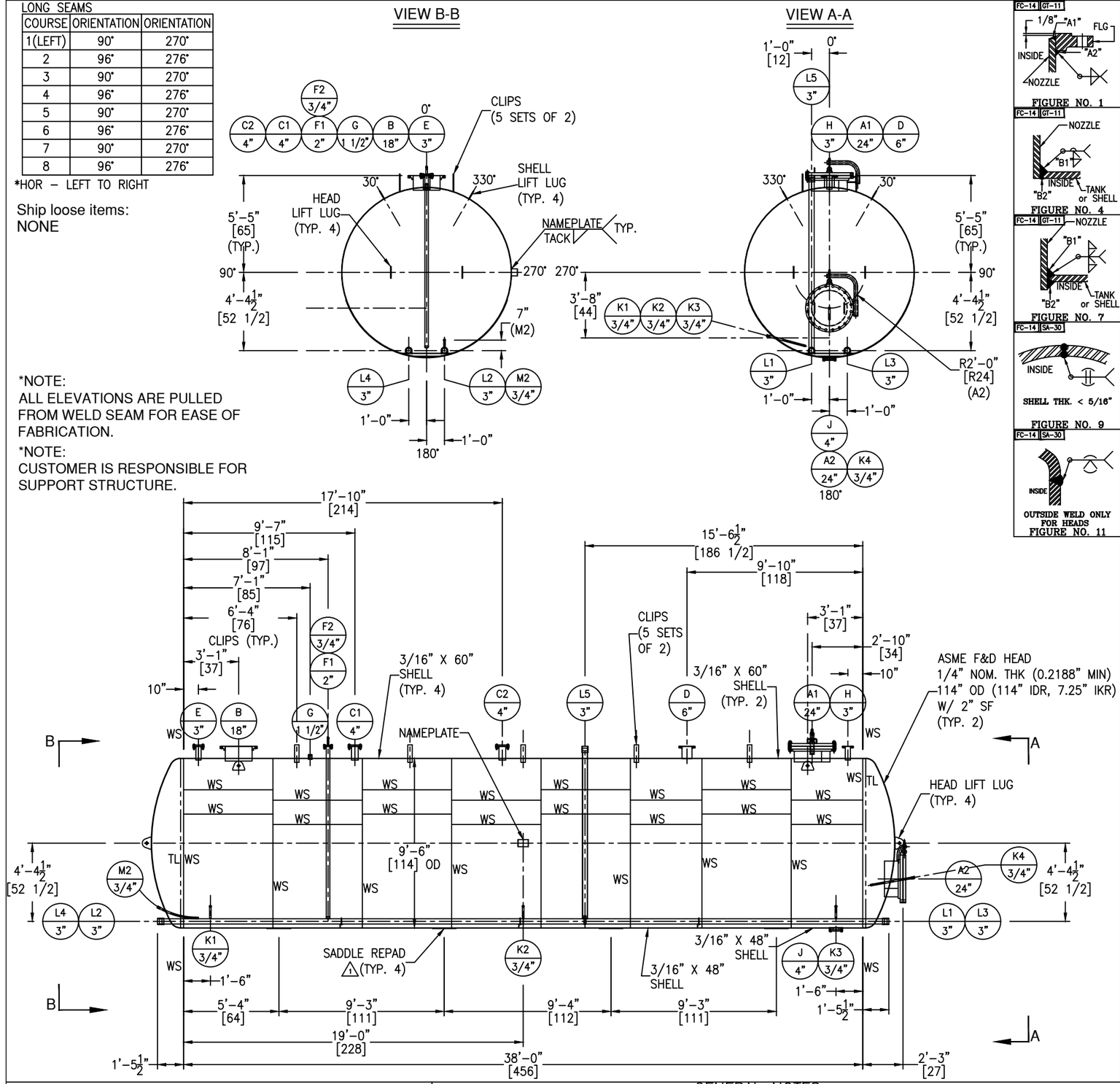

NOZZLE SCHEDULE

MARK	SERVICE	SIZE	RATING	TYPE / STYLE	NECK SCHED.	PROJECTION EXT. (℄)	PROJECTION INT. (MIN.)	WELD FIGURE	REPAD SIZE (WIDTH X THK.)	WELD SIZE "A1"	"A2"	"B1"	"B2"	"C1"	"C2"
A1	MANHOLE	24"	150#	RFSO W/ DAVIT	3/16"	8"	1"	1,7	–	3/16	5/16	3/16	1/8	–	–
A2	MANHOLE	24"	150#	RFSO W/ DAVIT	3/16"	SEE DWG	1"	1,7	–	3/16	5/16	3/16	1/8	–	–
B	PUMP MT.	18"	150#	RFSO	3/16"	8"	1"	1,7	–	3/16	5/16	3/16	1/8	–	–
C1	SPARE	4"	150#	RFSO W/ BLIND	40S	8"	1"	1,7	–	1/4	3/8	3/16	1/8	–	–
C2	SPARE	4"	150#	RFSO W/ BLIND	40S	8"	1"	1,7	–	1/4	3/8	3/16	1/8	–	–
D	VENT	6"	150#	RFSO	40S	8"	1"	1,7	–	1/4	7/16	3/16	1/8	–	–
E	SPARE	3"	150#	RFSO W/ BLIND	40S	8"	1"	1,7	–	1/4	3/8	3/16	1/8	–	–
F1	THERM	2"	150#	RFSO W/ BLIND	–	8"	1"	1,7	–	–	–	3/16	1/8	–	–
F2	THERM	3/4"	3000#	FULL THRD CPLG	–	–	–	SEE DWG	–	–	–	1/8	1/8	–	–
G	GAGE	1 1/2"	3000#	FULL THRD CPLG	–	–	1/2"	7	–	–	–	3/16	1/8	–	–
H	FILL	3"	150#	RFSO	40S	8"	1"	1,7	–	1/4	3/8	3/16	1/8	–	–
J	DRAIN	4"	150#	STUDPAD W/ BLIND	–	–	–	4	–	–	–	3/16	1/8	–	–
K1	THERM WELL	3/4"	3000#	PIPE W/ FULL THRD CPLG	40S	SEE DWG	SEE DWG	7	–	–	–	1/8	1/8	–	–
K2	THERM WELL	3/4"	3000#	PIPE W/ FULL THRD CPLG	40S	SEE DWG	SEE DWG	7	–	–	–	1/8	1/8	–	–
K3	THERM WELL	3/4"	3000#	PIPE W/ FULL THRD CPLG	40S	SEE DWG	SEE DWG	7	–	–	–	1/8	1/8	–	–
K4	THERM WELL	3/4"	3000#	PIPE W/ FULL THRD CPLG	40S	SEE DWG	SEE DWG	SEE DWG	–	–	–	1/8	1/8	–	–
L1	–	3"	3000#	PIPE W/ FULL THRD CPLG	40S	SEE DWG	SEE DWG	7	–	–	–	3/16	1/8	–	–
L2	–	3"	3000#	PIPE W/ FULL THRD CPLG	40S	SEE DWG	SEE DWG	7	–	–	–	3/16	1/8	–	–
L3	–	3"	3000#	PIPE W/ FULL THRD CPLG	40S	SEE DWG	SEE DWG	7	–	–	–	3/16	1/8	–	–
L4	–	3"	3000#	PIPE W/ FULL THRD CPLG	40S	SEE DWG	SEE DWG	7	–	–	–	3/16	1/8	–	–
L5	–	3"	3000#	PIPE W/ FULL THRD CPLG	40S	SEE DWG	SEE DWG	7	–	–	–	3/16	1/8	–	–
M2	–	3/4"	3000#	PIPE W/ FULL THRD CPLG	40S	SEE DWG	SEE DWG	7	–	–	–	1/8	1/8	–	–

MATERIALS OF CONSTRUCTION

	VESSEL
SHELL	SA240-316/316L
HEADS	SA240-316/316L
ANGLE SUPPORT	SA479-316/316L
NOZZLE NECKS	SA312-316/316L WLD
NOZZLE FLANGES	SA182F-316/316L
MANWAY NECKS	SA240-316/316L
MANWAY FLANGES	SA182F-316/316L
GASKETS	GARLOCK 3000
BOLTS/STUDS	SA193-B7 (ZINC PLATED)
NUTS	SA194-2H (ZINC PLATED)
U-BOLT	SA479-316/316L
COUPLINGS	SA182F-316/316L
SUPPORTS/HOLD DOWNS	*BY OTHERS*
LIFTING LUGS	SA240-304/304L
REPAD	SA240-304/304L
INSULATION RINGS	–
GROUND LUG	–
BAFFLE	–
LADDER	–
TANK CLIPS (LADDER)	–
HANDRAIL	–
HANDRAIL CLIPS	–
PLATFORM	–
PLATFORM CLIPS	–
DIPTUBE SUPPORT	–
JACKET SHELL	–
JACKET HEADS	–
JACKET NOZZLE NECKS	–
JACKET NOZZLE FLANGES	–

DESIGN DATA

	VESSEL
DESIGN AND FAB. CODE	ASME
CERT. STAMP REQ'D.	YES
DESIGN PRESSURE	15 PSIG / -0.1 PSIG 1
DESIGN TEMPERATURE	300° F
MIN. DESIGN METAL TEMP.	-20° F @ 15 PSIG
OPERATING PRESSURE	–
OPERATING TEMPERATURE	–
JOINT EFFICIENCY HEADS	0.70
JOINT EFFICIENCY SHELL	0.70
CORROSION ALLOWANCE	0"
SPECIFIC GRAVITY	1 1.32
EARTHQUAKE ZONE	Ss = (0.18) S1 = (0.066)
WIND LOAD	109 MPH
STRESS RELIEF	NOT REQ'D
RADIOGRAPHIC EXAM	NOT REQ'D
DYE PENETRANT EXAM	NOT REQ'D
MAGNETIC PARTICLE EXAM	NOT REQ'D
HYDROSTATIC TEST	–
PNEUMATIC TEST	19 PSIG
JKT DESIGN AND FAB. CODE	–
JKT CERT. STAMP REQ'D.	–
JKT DESIGN PRESSURE	–
JKT DESIGN TEMPERATURE	–
JKT MIN. DESIGN METAL TEMP.	–
JKT OPERATING PRESSURE	–
JKT OPERATING TEMPERATURE	–
JKT JOINT EFFICIENCY HEADS	–
JKT JOINT EFFICIENCY SHELL	–
JKT HYDRO TEST	–

VESSEL FINISH

INTERIOR WELD TREATMENT:	SAV TANK STANDARD
EXTERIOR WELD TREATMENT:	SAV TANK STANDARD
SAV TANK FINISHING STANDARD:	SEE NOTE 6
INSULATION:	N/A
PAINTING:	N/A

VESSEL CAPACITY AND WEIGHTS

OPERATING CAPACITY	–
FULL CAPACITY	21,400 GAL.
EMPTY SHIPPING WEIGHT	1 15,300 LBS.
WEIGHT FULL OF WATER	1 193,900 LBS.
WEIGHT FULL OF PRODUCT	1 251,050 LBS.

ASME SECT. VIII, DIV. 1
2023 EDITION

ENG. _____ DATE: _____
Q.C. _____ DATE: _____
A.I. _____ DATE: _____

This drawing is issued for customer approval. please review, make approval changes (if any) in red. check the appropriate box, sign & date.

- ☐ Approval – no changes. Please proceed with fabrication.
- ☐ Approved as noted. Please proceed with fabrication
- ☐ Not approved. Please make changes and resubmit.

Customer signature _____ Date _____

GENERAL NOTES

1.) COVER ALL FLANGES, OPENINGS & MACHINED SURFACES PRIOR TO SHIPMENT UNLESS OTHERWISE NOTED.
2.) BOLT HOLES TO STRADDLE 0° & 180° UNLESS OTHERWISE NOTED.
3.) REPADS TO HAVE (1) ø1/4" NPT TELL-TALE HOLES FOR PNEUMATIC TESTING AT 2 PSIG FOR PRESSURE RETAINING PARTS. ALL OTHER REPADS TO HAVE (1) ø1/4" WEEP HOLE AT LOWEST POINT ON PAD.
4.) ASME CODE VESSELS TO BE IN ACCORDANCE WITH UG-80 & UG-81. TOLERANCES: +/- 1/8" FOR DIMENSIONS AND +/- 2 DEGREES FOR ORIENTATIONS.
5.) ASME MATERIALS TO CONFORM TO THE FOLLOWING: FLANGES – B16.5, FITTINGS – B16.9 & COUPLINGS – B16.11.
6.) PICKLE ALL EXTERIOR WELDS. PASSIVATE INTERIOR & EXTERIOR OF VESSEL.

REV	D.BY	C.BY	DATE	DESCRIPTION
2				AS BUILT
1	RS	NP	1/6/26	CERTIFIED
0	RS	AD	12/08/25	APPROVAL

1 REVISIONS

Savannah Tank & Equipment Corp.
1517 Telfair Road, Savannah, GA 31415
(912) 233-8902

DRAWN BY: RS
CHK'D BY: AD
APPROVED BY: NP
SCALE: 1/4" = 1'-0"

POLYNT COMPOSITES USA INC.
MALEIC ANHYDRIDE TANK
EQUIP. #
CUST. PO #4500682178

DRAWING NO.: 116-25-1 SHT 1 OF 5 REV. SET 1

FC-14

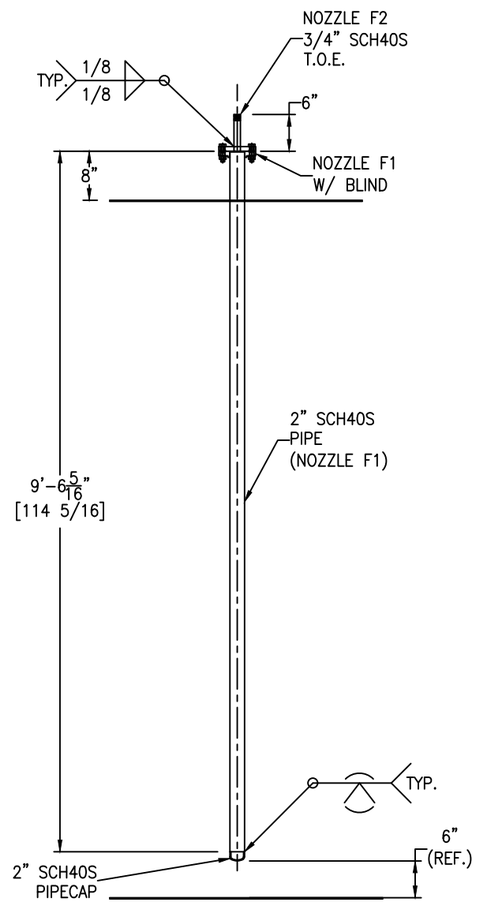

NOZZLE F1/F2 DETAIL

SCALE: 3/4" = 1'-0"

FC-14

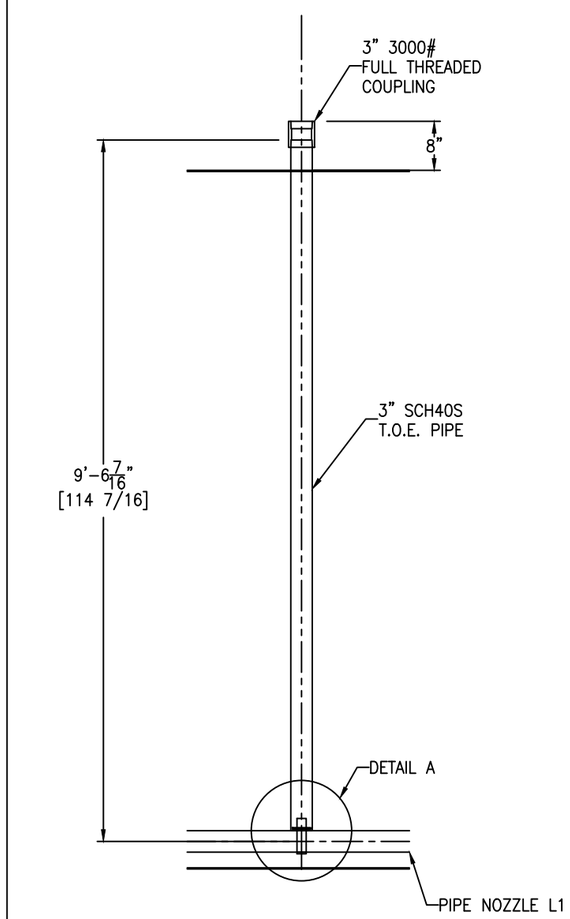

NOZZLE L5 DETAIL

SCALE: 3/4" = 1'-0"

FC-14

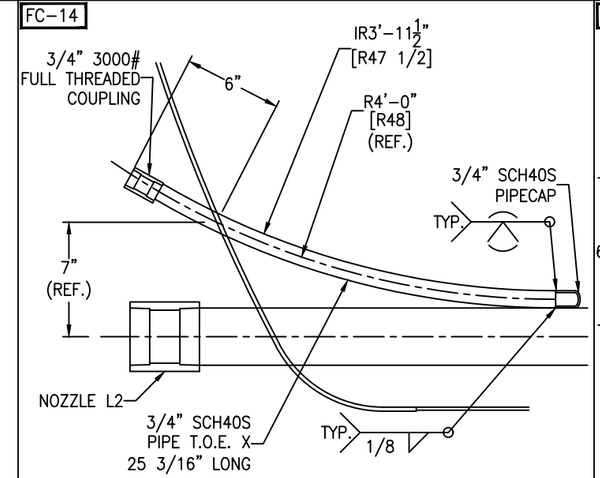

NOZZLE M2 DETAIL

SCALE: 2" = 1'-0"

FC-14

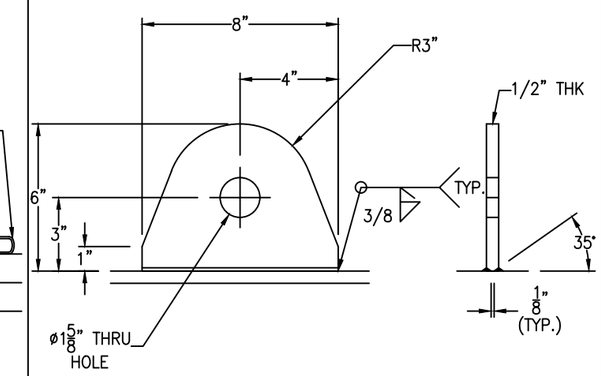

TANK WT. <= 20000#
SHACKLE PIN DIA. = 1 1/2"

SHELL & HEAD LIFT LUG DETAIL

(4+4 REQ'D) SCALE: 3" = 1'-0"

FC-14

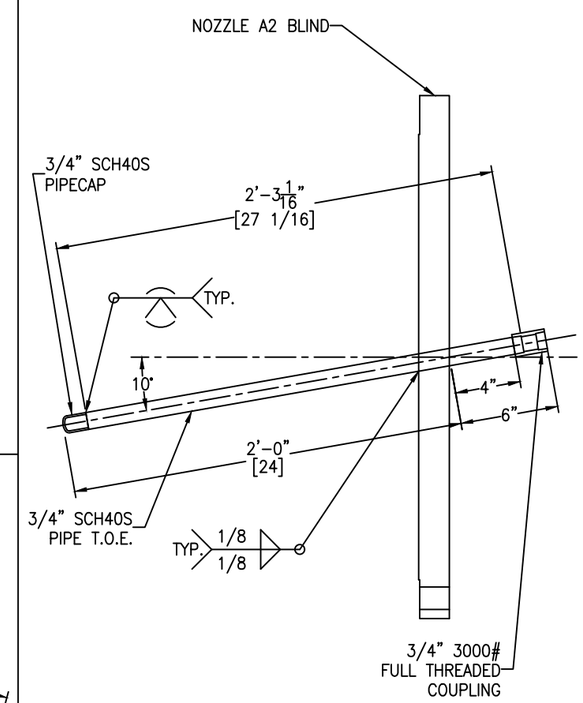

NOZZLE K4 DETAIL

SCALE: 2" = 1'-0"

Bolting for blinds

F1: (4) 5/8"-11 NC x 2 1/2" HH BOLT
(4) 5/8"-11 NC HH NUT
(1) 2" 150# RING GASKET x 1/8" THK.

C1/C2: (8+8) 5/8"-11 NC x 3" HH BOLT
(8+8) 5/8"-11 NC HH NUT
(1+1) 4" 150# RING GASKET x 1/8" THK.

E: (4) 5/8"-11 NC x 2 1/2" HH BOLT
(4) 5/8"-11 NC HH NUT
(1) 3" 150# RING GASKET x 1/8" THK.

J: (4) 5/8"-11 NC x 2 3/4" FULL THREADED STUD
(4) 5/8"-11 NC HH NUT
(1) 4" 150# RING GASKET x 1/8" THK.

FC-14

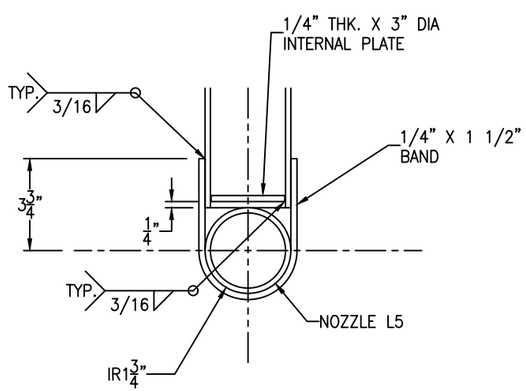

DETAIL A DETAIL

SCALE: 1'-0" = 1'-0"

FC-14

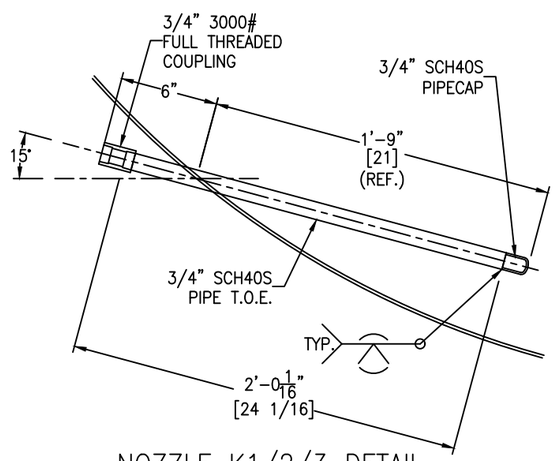

NOZZLE K1/2/3 DETAIL

(3 REQ'D) SCALE: 2" = 1'-0"

REV	D.BY	C.BY	DATE	DESCRIPTION
2				AS BUILT
1	RS	NP	1/6/26	CERTIFIED
0	RS	AD	12/08/25	APPROVAL

REVISIONS

Savannah Tank & Equipment Corp.
1517 Telfair Road, Savannah, GA 31415
(912) 233-8902

DRAWN BY: RS
CHK'D BY: AD
APPROVED BY: NP
SCALE: 1/4" = 1'-0"

POLYNT COMPOSITES USA INC.
MALEIC ANHYDRIDE TANK
EQUIP. #
CUST. PO #4500682178

DRAWING NO.: 116-25-2 | SHT 2 OF 5 | REV. SET 1

FC-14 GT-11

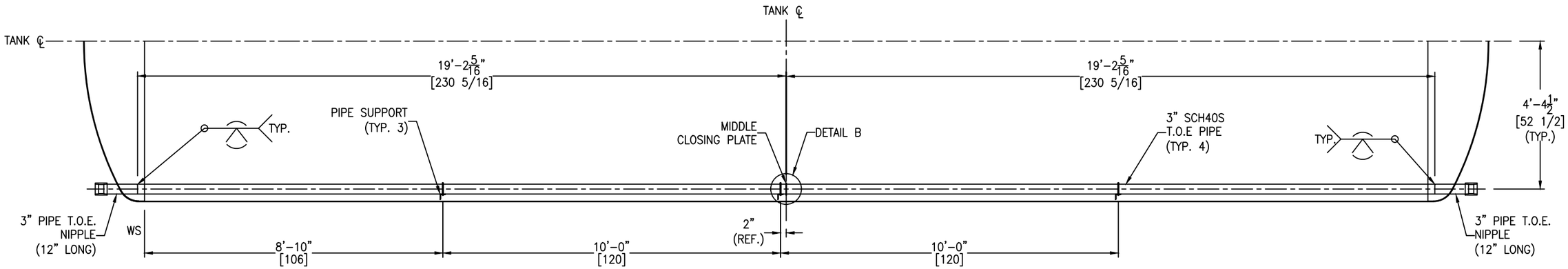

NOZZLE L1/2/3/4 DETAIL

SCALE: 1/2" = 1'-0"

FC-14

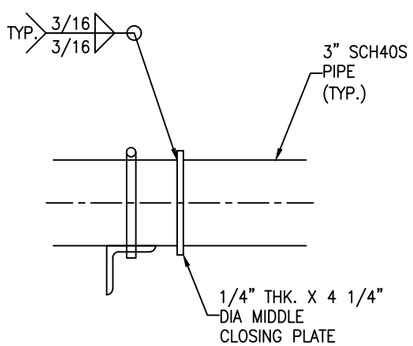

DETAIL B DETAIL

(2 REQ'D) SCALE: 3" = 1'-0"

FC-14

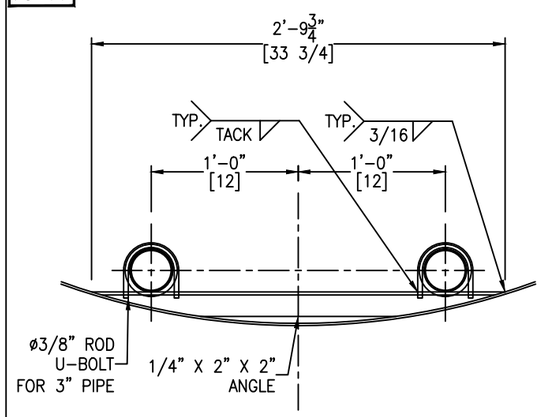

PIPE SUPPORT DETAIL

(3 REQ'D) SCALE: 1 1/2" = 1'-0"

FC-14

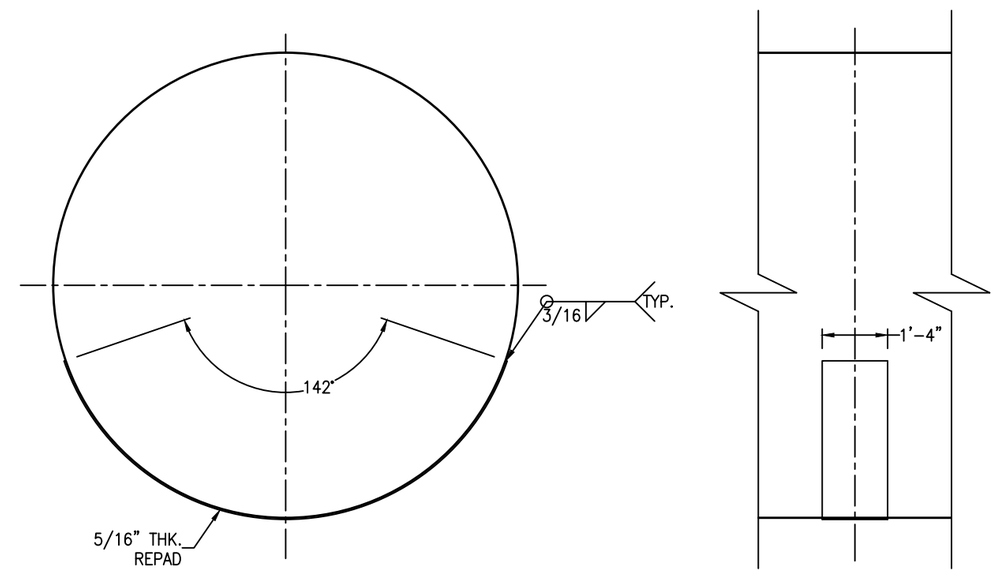

⚠1 SADDLE REPAD DETAIL

(4 REQ'D) SCALE: 1/2" = 1'-0"

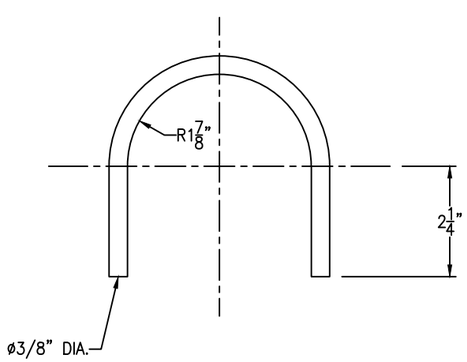

U-BOLT DETAIL

(6 REQ'D) SCALE: 6" = 1'-0"

FC-14

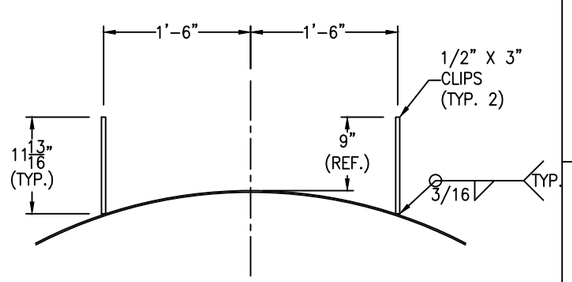

CLIPS DETAIL

(5 REQ'D) SCALE: 1" = 1'-0"

REV	D.BY	C.BY	DATE	DESCRIPTION
2				AS BUILT
1	RS	NP	1/9/26	CERTIFIED
0	RS	AD	12/08/25	APPROVAL

⚠1 REVISIONS

Savannah Tank & Equipment Corp.
1517 Telfair Road, Savannah, GA 31415
(912) 233-8902

DRAWN BY: RS
CHK'D BY: AD
APPROVED BY: NP
SCALE: 1/4" = 1'-0"

POLYNT COMPOSITES USA INC.
MALEIC ANHYDRIDE TANK
EQUIP. #
CUST. PO #4500682178

DRAWING NO.: 116-25-3 SHT 3 OF 5 REV. SET 1

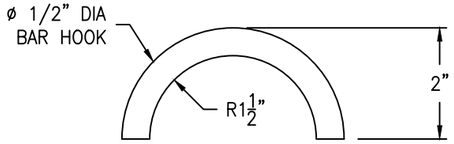

HOOK DETAIL

(1 REQ'D) SCALE: 6" = 1'-0"

FC-14

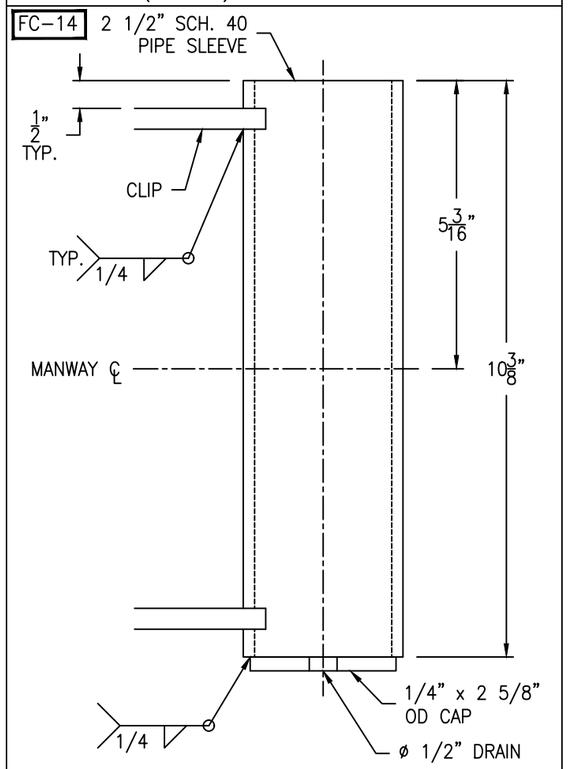

SLEEVE DETAIL

(1 REQ'D) SCALE: 6" = 1'-0"

FC-14

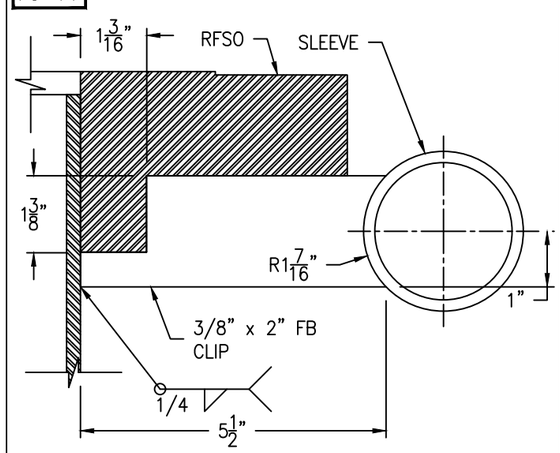

CLIP DETAIL

(2 REQ'D) SCALE: 6" = 1'-0"

FC-14

Bolting for blind
(20) 1 1/4-7 NC x 7" FULL THREADED STUD
(40) 1 1/4-7 NC HH NUT
(1) 24" 150# RING GASKET x 1/8"

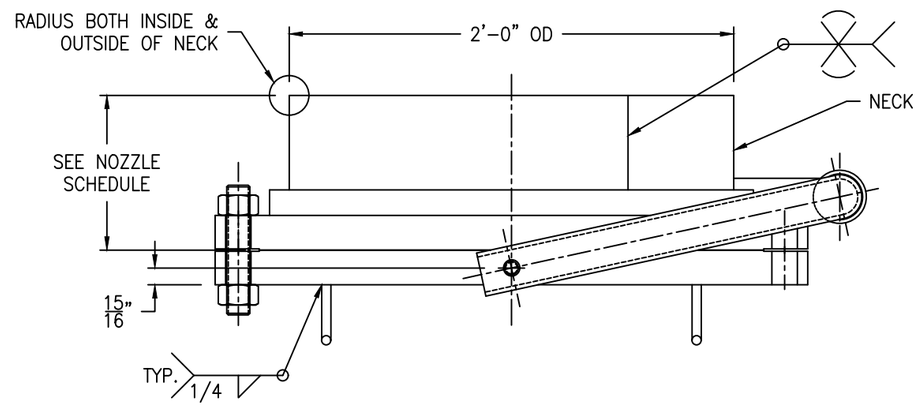

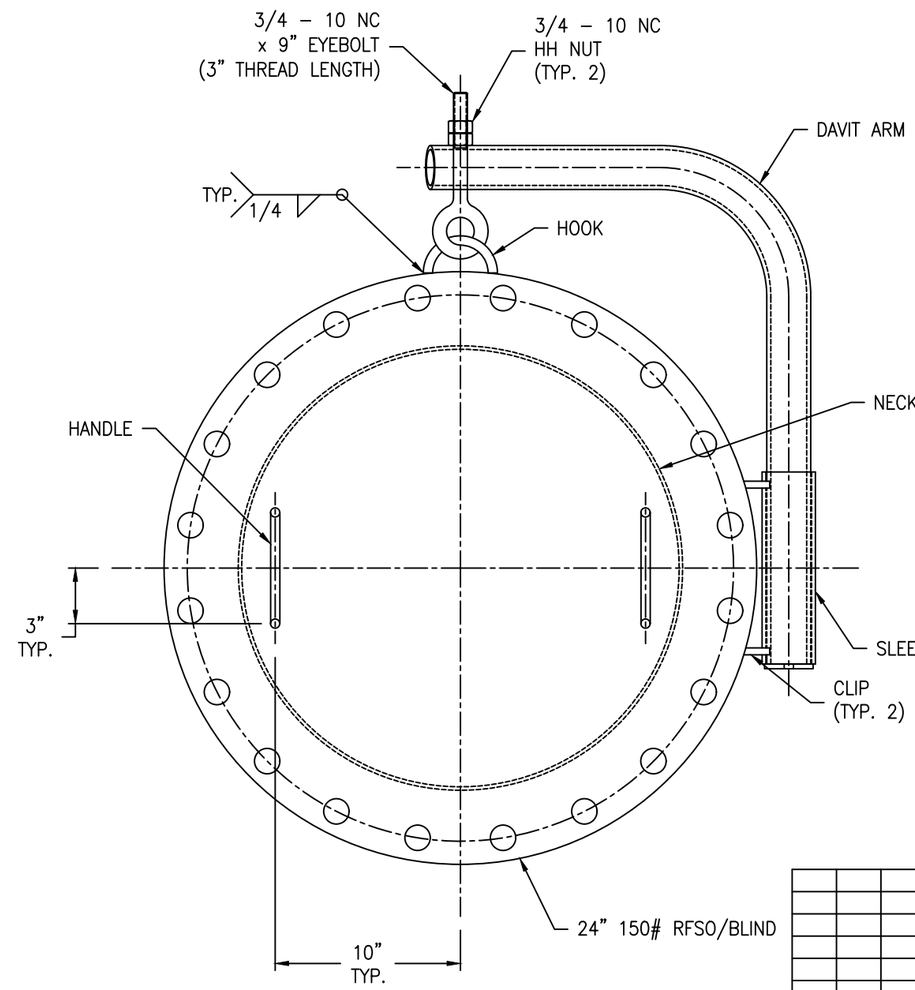

MANWAY A2 DETAIL

SCALE: 2" = 1'-0"

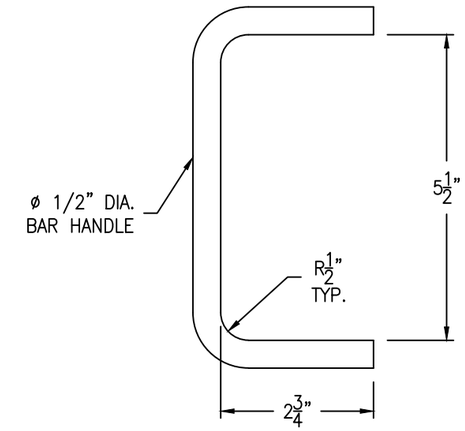

HANDLE DETAIL

(2 REQ'D) SCALE: 6" = 1'-0"

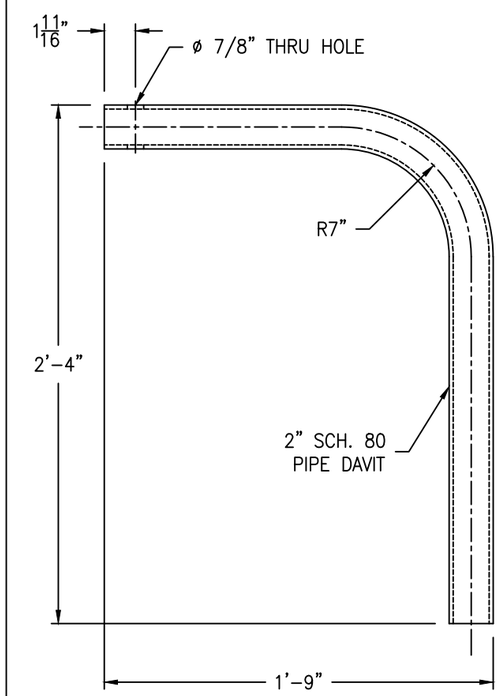

DAVIT ARM DETAIL

(1 REQ'D) SCALE: 2" = 1'-0"

REV	D.BY	C.BY	DATE	DESCRIPTION
2				AS BUILT
1	RS	NP	1/6/26	CERTIFIED
0	RS	AD	12/08/25	APPROVAL

1 REVISIONS

Savannah Tank & Equipment Corp.
1517 Telfair Road, Savannah, GA 31415
(912) 233-8902

DRAWN BY: RS
CHK'D BY: AD
APPROVED BY: NP
SCALE: 2" = 1'-0"

POLYNT COMPOSITES USA INC.
MALEIC ANHYDRIDE TANK
EQUIP. #
CUST. PO #4500682178

DRAWING NO.: 116-25-4 SHT 4 OF 5 REV. SET 1

FC-14

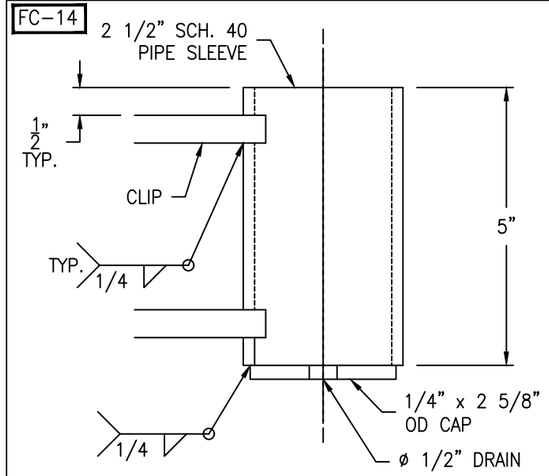

SLEEVE DETAIL

(1 REQ'D) SCALE: 6" = 1'-0"

FC-14

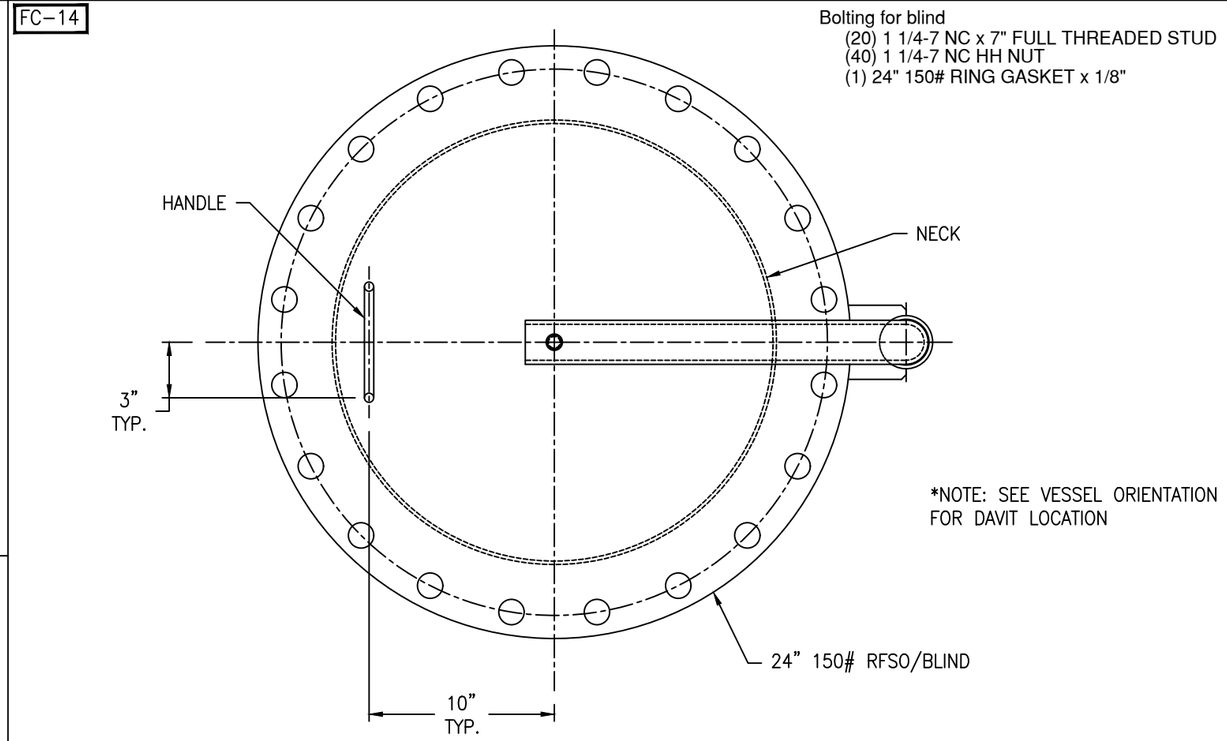

*NOTE: SEE VESSEL ORIENTATION FOR DAVIT LOCATION

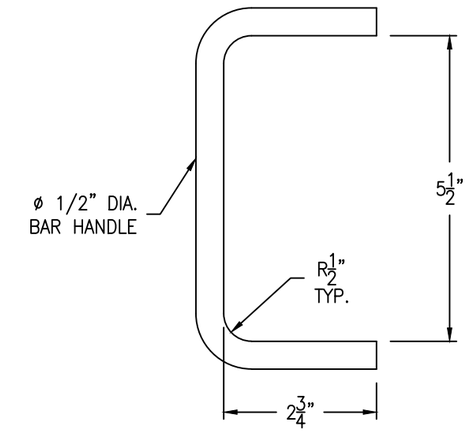

HANDLE DETAIL

(1 REQ'D) SCALE: 6" = 1'-0"

FC-14

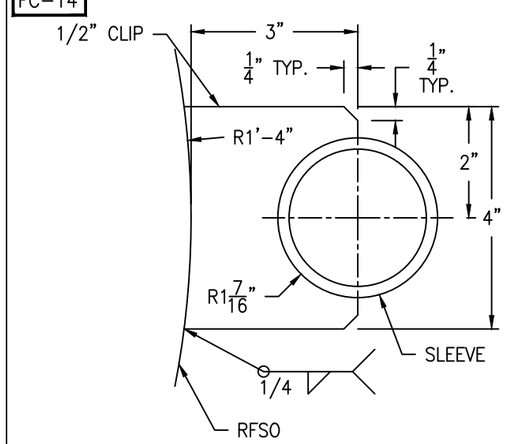

UPPER CLIP DETAIL

(1 REQ'D) SCALE: 6" = 1'-0"

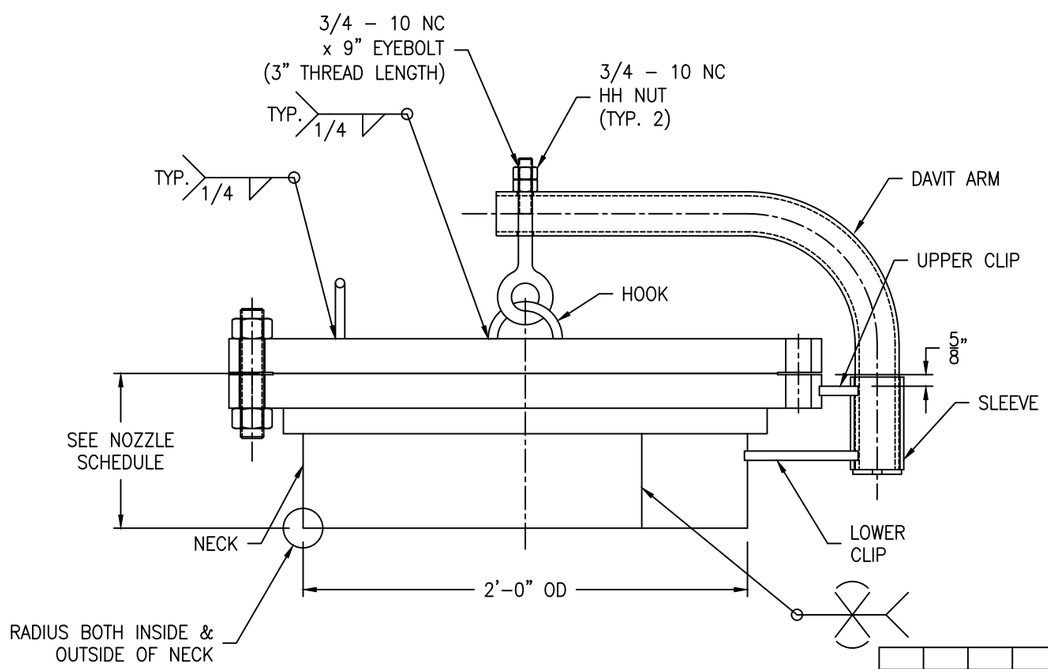

MANWAY A1 DETAIL

SCALE: 2" = 1'-0"

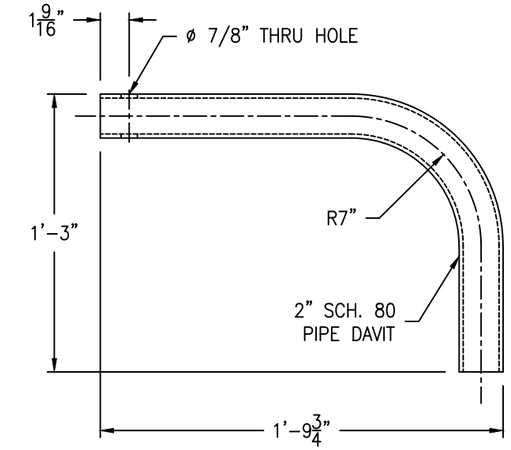

DAVIT ARM DETAIL

(1 REQ'D) SCALE: 2" = 1'-0"

FC-14

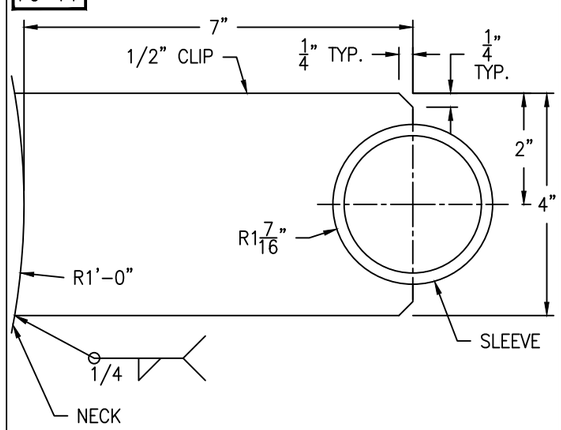

LOWER CLIP DETAIL

(1 REQ'D) SCALE: 6" = 1'-0"

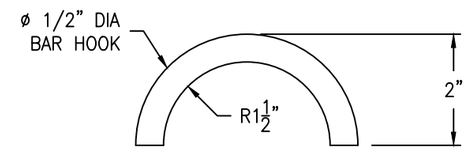

HOOK DETAIL

(1 REQ'D) SCALE: 6" = 1'-0"

REV	D.BY	C.BY	DATE	DESCRIPTION
2				AS BUILT
1	RS	NP	1/6/26	CERTIFIED
0	RS	AD	12/08/25	APPROVAL

1 REVISIONS

Savannah Tank & Equipment Corp.
1517 Telfair Road, Savannah, GA 31415
(912) 233-8902

DRAWN BY:	RS
CHK'D BY:	AD
APPROVED BY:	NP
SCALE:	2" = 1'-0"

POLYNT COMPOSITES USA INC.
MALEIC ANHYDRIDE TANK
EQUIP. #
CUST. PO #4500682178

DRAWING NO.: 116-25-5 SHT 5 OF 5 REV. SET 1